Oceanus LATMIX Ship Operations

1 -21 June 2011

Overview of Science Operations

Science operations will involve surveys coordinated with two other vessels (Hatteras and Endeavor) and the locations of dye and various autonomous platforms (floats, drifters and gliders). Oceanus will:

1. Conduct surveys in a 'large' (likely between 50 km by 50 km and 10 km by 10 km) domain using Triaxus.
2. Deploy and recover the REMUS AUV.
3. Conduct 'small-scale' surveys (likely in a 5 km by 5 km domain) with Hammerhead during the period when REMUS is operating.
4. Recover (floats, drifters and gliders, previously deployed by the other vessels) and, perhaps, re-deploy autonomous assets as needed. Oceanus will typically be called upon to do this when these assets drift far from the limited work areas of the other too vessels.
5. Conduct broad scouting surveys with Triaxus during the periods when the entire 3-ship program is searching for new experimental sites (likely 2 – 3 instances during the entire cruise).

During routine operations (excluding scouting surveys (5) and asset recovery (4)) we will likely conduct 36-48 hours of Triaxus surveys interspersed with 12 hours of REMUS operations and concurrent Hammerhead surveys.

Equipment Specifications and Operations Notes

Triaxus Towed Profiler

Winch: Dynacon model 10030

- line pull 3500 lbs.
- Winch cert of compliance attached.
- Deck mount - drawings and calculations attached. Minimum safety factor is 2.7 over cable break. Winch cert of compliance attached.
- Power: 3-phase, 440V.

Block: Campbell A1422D block (catalog page attached)

- Armored, 10 mm diameter.
- SWL 7000 lbs.
- Ultimate strength 21000 lbs

Cable: Rochester A305382

- Break strength 16000 lbs.
- http://www.rochestercables.com/pdfs/DataLines/EOP/A305382.pdf
- As an added safeguard, the Triaxus vehicle is attached to the cable through a weak link sized at 5000 lbs.

Triaxus Vehicle

- Weight approximately 400 lbs.
- Dimensions: roughly 6' x 4' x 6'
- Deploy and recover through A-frame.
- Towed directly on winch and block. We do not use a fixed tow point, as we need to retain the ability to change cable length during the tow.
- Cable out depends on target profiling depth (deeper depths require more cable). For this experiment, we anticipate cable-out between 300 – 1000 m.
- Triaxus undulates under automatic control, with full-time operator oversight.
- Deployment: The winch is used to lift Triaxus from the deck, with the vehicle restrained by slip-lines running through recovery rings on each side. Triaxus will be lowered into the water off the stern with Oceanus moving at 1 – 2 knots. Once the vehicle is in the water and slip lines are clear, tow speed will gradually be increased to 6 – 8 knots (final speed depends on target profiling range and vertical rate).

- Recovery: Slow ship to 2 – 3 knots and pull Triaxus in. When vehicle is close to the stern, slow to roughly 0.5 knot, bring to within reach and hook two recovery bales using specialized, closing hooks on the end of long, stiff carbon fiber poles. Restrain vehicle using tag lines and bring aboard using A-frame and winch. Caution is required to prevent vehicle from surging into the stern of the ship (will discuss operations in detail prior to sailing).

Hammerhead Towed Profiler

Winch

- Footprint: 4.5’ x 4.5’ x 4..5’.
- Weight 2200 lbs.
- Boltdown will use 1 of six 1” mounting holes on the winch and clamp the rest of the frame to the deck with pieces of 3” steel channel drilled to pick up the 24” deckgrid. These pieces will pass over the existing 3”x2” channel of the winch frame and be bolted to the deck on either side of the winch frame using 5”x1”.
- Power: 3-phase, 220 volts.

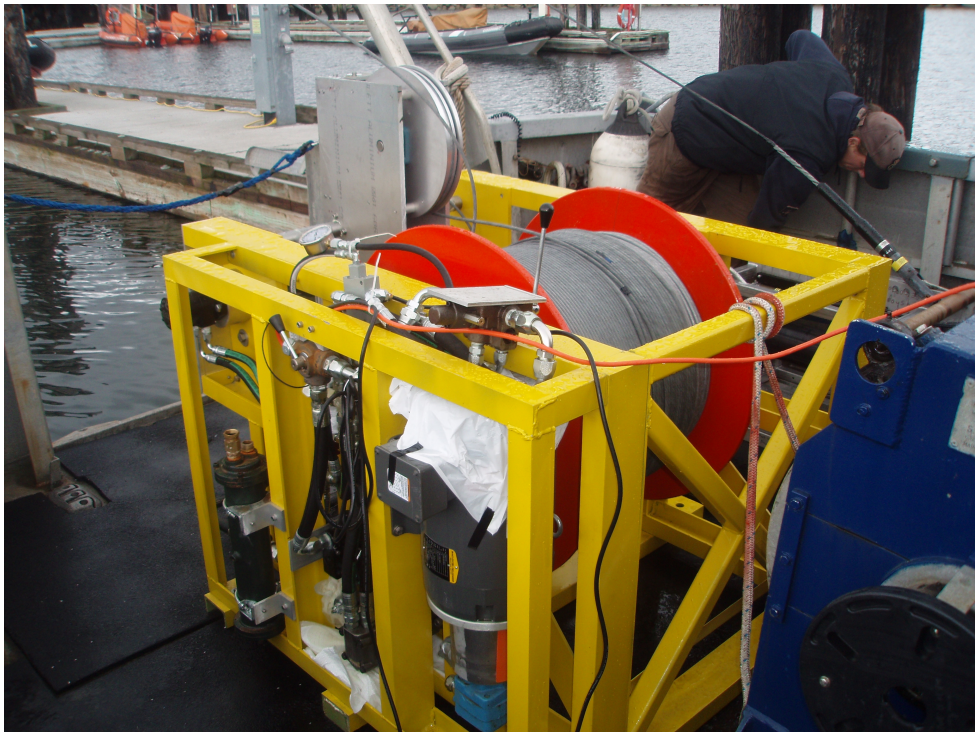

Block: Sherman & Reilly 22-inch 78 series, model no. 7832

- SWL 2500 lbs.
- Max. test load limit 10,000 lbs.

Cable: Rochester Stock Type 7-H-214A

- Armored, 0.326" diameter.
- SWL 2750 lbs.
- Break strength 11,000 lbs.

Hammerhead Vehicle

- Weight: 750 lb.
- Dimensions: 3' x 3' x 10' (6' x 10' footprint with strapping).
- Deploy and recover through A-frame.
- Towed directly on winch and block.
- Deployment: Hammerhead will be lifted by its winch through the snatchblock and maneuvered by 2 deck personnel using boathooks and taglines out of the A-frame to limit swinging and yawing, and lowered into the water to a few m depth. Two taglines will be looped through the frame rings on either side of the instrument and doubled back to allow them to be removed once the instrument is secure in the water. It will be turned on to check that all sensors are operating. Upon confirmation, it will be lowered to its operating depth where it will be towyoed through its snatchblock on the A frame and a linefeeder on the winch by the winch operator as directed from the lab with our cable communication system to track the dye density surface.
- Recovery: Hammerhead will be raised to within a few m of the surface, powered down. Two taglines will be attached to the Hammerhead frame rings by snatch clips to control swinging and yawing by 2 deck personnel as

the instrument is lifted by its winch operator out of the water and the A frame swung in to bring Hammerhead on board. Hammerhead will then be lowered to the deck by the winch and secured.

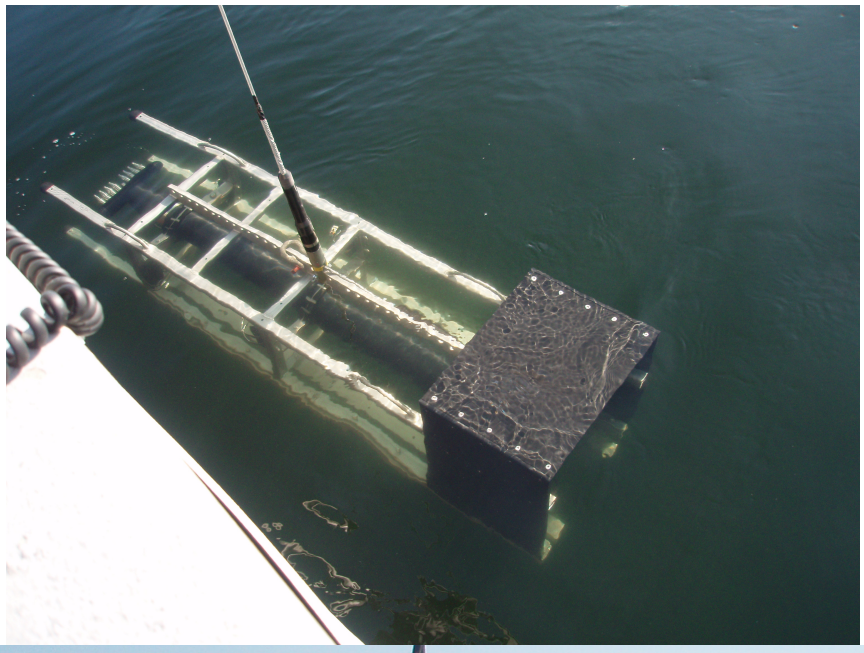

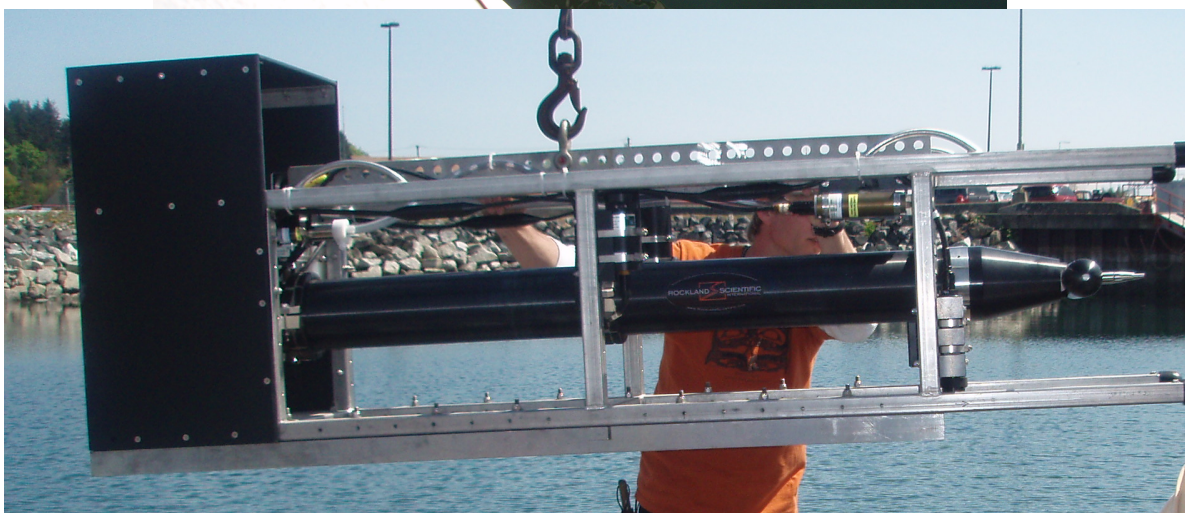

REMUS Autonomous Underwater Vehicle

Navigation Buoy System (3 elements)

1. Gateway buoy (communication and navigation) has RF/Iridium comms with the ship, and acoustic comms with the AUV. The AUV also pings the buoy to establish a range to it. The AUV basically heads in an arbitrary direction, pinging the buoy periodically. When the range exceeds a pre-set distance, the AUV turns 90 degrees in a pre-set direction (CW or CCW). Every few minutes, the AUV sends an acoustic modem message containing data on position, depth, heading, etc., which is relayed by the Gateway buoy to the ship, where it is stored until an INFLO upload is done.
2. Themistor chain buoy is tethered to the Gateway buoy, ~10m apart, and will have a 50m thermistor chain hanging from it. This is a Polyform CC-4 with a radar reflector on it.
3. Drogue buoy is a Polyform A3 or A4 with a drogue (10 m length, 1.2 m diameter) hanging from it. This is tethered to the Thermistor chain buoy.

- Each buoy weight roughly 100 lbs.
- Deploy buoy system using from stern of Oceanus using A-frame.
- Recover using RHIB to allow buoys to be disconnected prior to being brought aboard. Recovery from Oceanus possible if conditions preclude RHIB support.

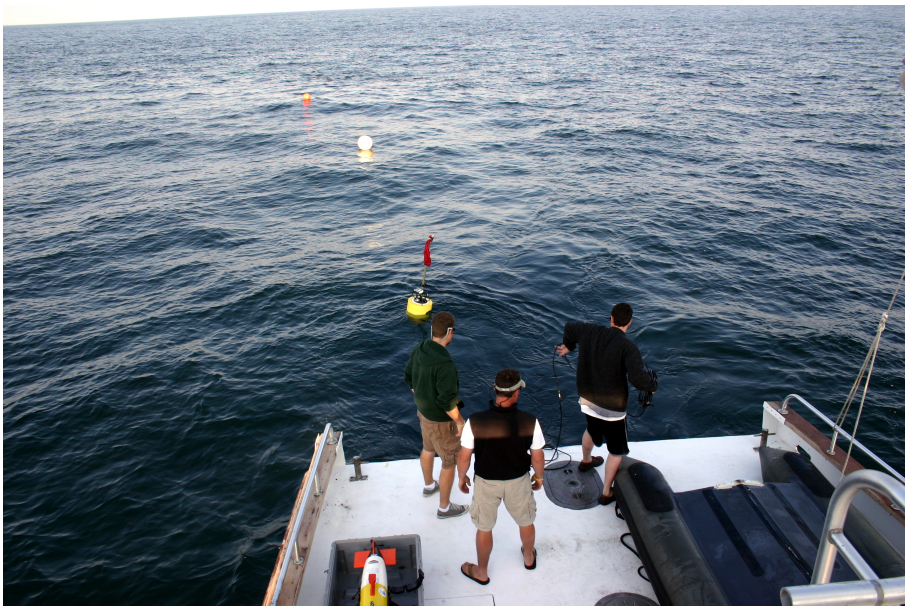

REMUS AUV

- Small AUV easily manipulated by one or two persons.
- Weight approximately 50 lbs.
- In calm weather, deploy using the crane. REMUS team is concerned about uncontrolled swinging of the load when there is significant ship motion.
- In rougher conditions, deploy from using the RHIB.
- Recover using the RHIB. Either pull the vehicle into the boat or drag it to Oceanus so that it can be hooked up to the crane.

DYNACON, Inc.
831 Industrial Blvd.
Bryan, Texas 77803

Certificate of Compliance

To: University of Washington
Applied Physics Laboratory
1013 NE 40th Street
Seattle, Washington 98105

Date: 20 September 2002
P.O. No.: 502076
Contact: Mr. Jason Gobat

Attention: Director, Quality Assurance

It is hereby certified that all the articles provided in the quantities called for on the above noted Purchase Order are in compliance with the requirements, specifications and drawings listed on that order.

Article(s) Purchased:

- DYNACON Model 10030 Cantilevered Drum Winch – S/N 768101 W-RC-EALW
- Remote Control with Line Monitor – S/N 768102-RC

Inspection records, test reports and other objective quality evidence substantiating conformance are on file at the point of manufacture.

Dennis Brunson
Vice-President, DYNACON, Inc.

Ref: 768

THIS DRAWING IS PROPRIETARY INFORMATION. REPRODUCTION, IN PART OR WHOLE, WITHOUT WRITTEN PERMISSION OF THE APPLIED PHYSICS LABORATORY IS PROHIBITED.

USE 1-8UNC FOR DECK BOLTS, GRADE 5 TORQUE 180 FT-LBS

USE 3/4-10 UNC FOR WINCH BOLTS, GRADE 5 TORQUE 180 FT-LB

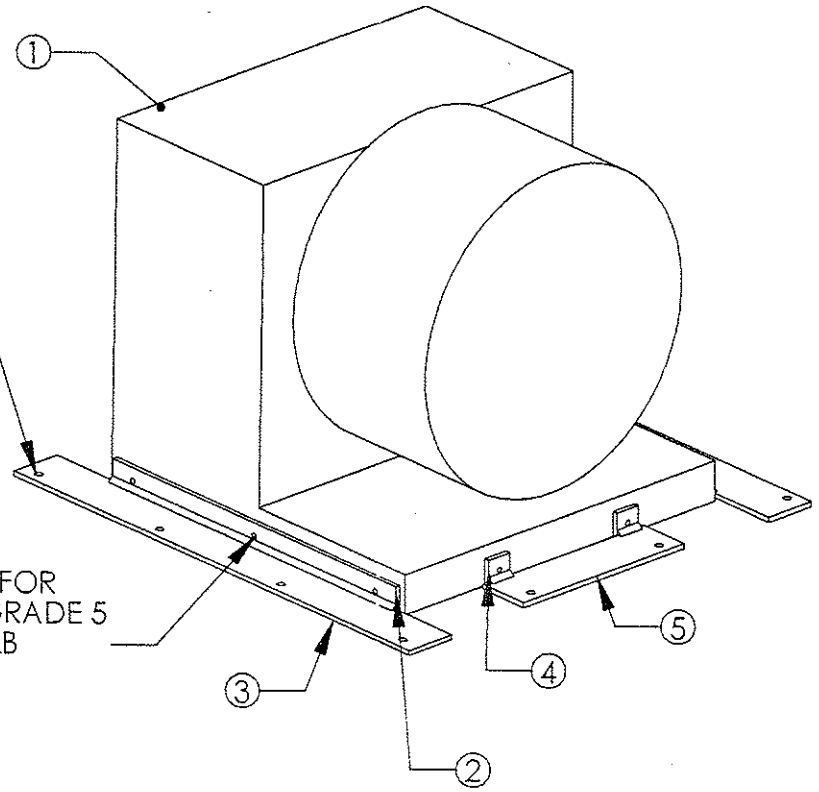

ITEM NO.	QTY.	PART NO.	TITLE	D
1	1	winch profile		
2	2	plate end, winch mount		
3	2	plate base end		
4	4	plate side, winch mount		
5	2	plate base side		

UNLESS OTHERWISE SPECIFIED

- APPLICABLE STANDARDS: MIL-STD-XX
- ALL DIMENSIONS ARE IN INCHES.
- SURFACE FINISH 125
- MACHINED FILLETS R
- INSIDE BEND RADII
- REMOVE ALL BURRS, BREAK SHARP EDGES R.015 MAX.
- DIMENSIONS AND SURFACE ROUGHNESS TO BE MET AFTER PROTECTIVE COATING.

TOLERANCES ON:	
HOLE DIAMETERS	±.003
.XX	±.020
.XXX	±.005
ANGLES	±1°

MATERIAL: N/A

SURFACE FINISH: SEE NOTE

PROJ MGR	V MILLER	
ENGINEER	v miller	
DRAWN	v miller	11/18/02
SCALE: 1:25	PLOT DATE: 11/18/02	
gm	cc	

APPLIED PHYSICS LABORATORY
UNIVERSITY OF WASHINGTON
SEATTLE, WASHINGTON 98105

WINCH MOUNT ASSY ON R/V KNORR DECK SEA SOAR

SIZE	CODE IDENT NO.	DRAWING NO.	REV
A	98514	XXXXX	

XXXXX	DLXXXXX
NEXT ASSY	USED ON

APPLICATION DATA

DO NOT SCALE THIS DRAWING

FILE: F:\Projects\SeaSoar\winch 10030\wonch on knorr deck

SHEET 1 OF 1

THIS DRAWING IS PROPRIETARY INFORMATION. REPRODUCTION, IN PART OR WHOLE, WITHOUT WRITTEN PERMISSION OF THE APPLIED PHYSICS LABORATORY IS PROHIBITED.

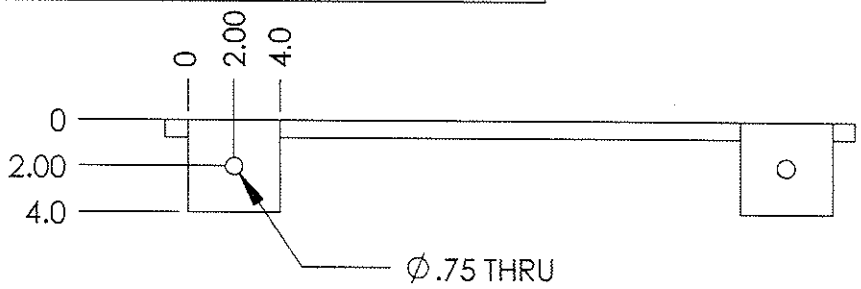

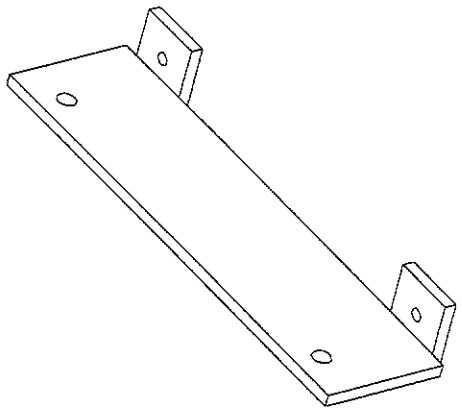

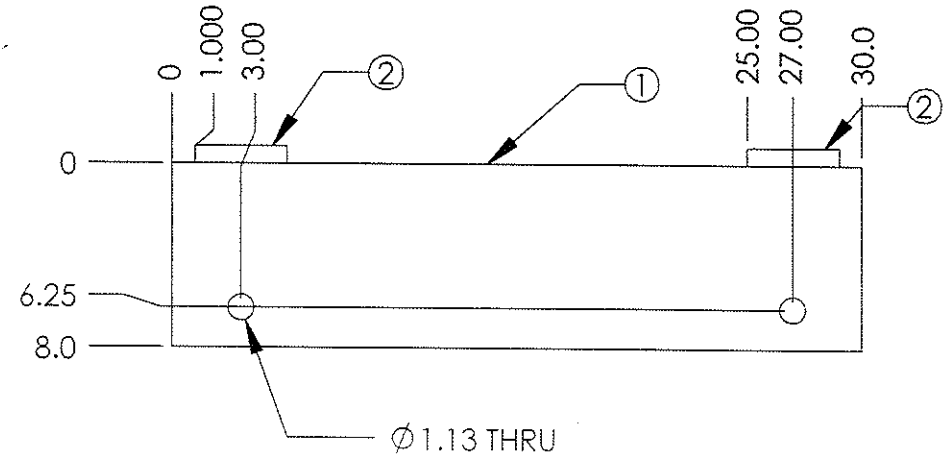

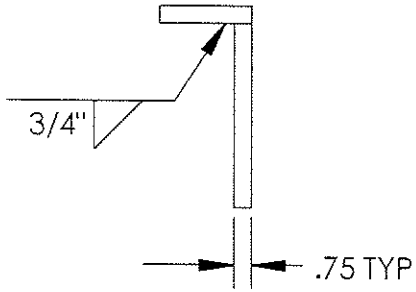

ITEM NO.	QTY.	PART NO.	TITLE	D
1	1	plate base side		
2	2	plate side, winch mount		

UNLESS OTHERWISE SPECIFIED

- APPLICABLE STANDARDS: MIL-STD-XX
- ALL DIMENSIONS ARE IN INCHES.
- SURFACE FINISH 125
- MACHINED FILLETS R
- INSIDE BEND RADII
- REMOVE ALL BURRS, BREAK SHARP EDGES R.015 MAX.
- DIMENSIONS AND SURFACE ROUGHNESS TO BE MET AFTER PROTECTIVE COATING.

TOLERANCES ON:	
HOLE DIAMETERS	±.003
.XX	±.020
.XXX	±.005
ANGLES	±1°

MATERIAL: ASTM A36

SURFACE FINISH: SEE NOTE

PROJ MGR	V MILLER	
ENGINEER	v miller	
DRAWN	v miller	11/18/02
SCALE: 1:8	PLOT DATE: 11/18/02	
gm	cc	

APPLIED PHYSICS LABORATORY
UNIVERSITY OF WASHINGTON
SEATTLE, WASHINGTON 98105

SIDE PLATE END ASSY
WINCH BASE
SEA SOAR

SIZE	CODE IDENT NO.	DRAWING NO.	REV
A	98514	XXXXX	

XXXXX	DLXXXXX
NEXT ASSY	USED ON

APPLICATION DATA

DO NOT SCALE THIS DRAWING

FILE: F:\Projects\SeaSoar\winch 10030\side plate end assy

SHEET 1 OF 1

THIS DRAWING IS PROPRIETARY INFORMATION. ANY REPRODUCTION, IN PART OR WHOLE, WITHOUT WRITTEN PERMISSION OF THE APPLIED PHYSICS LAB IS PROHIBITED.

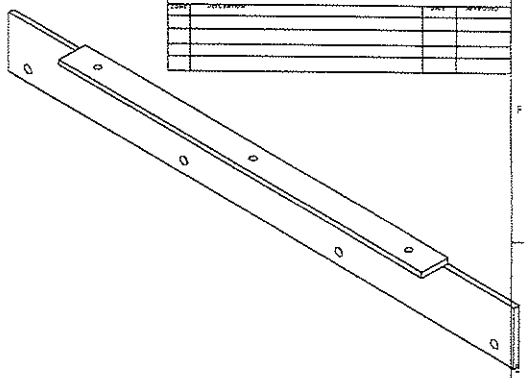

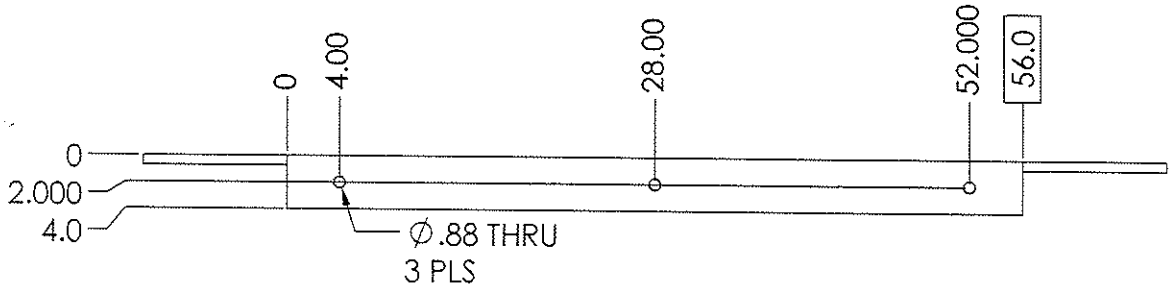

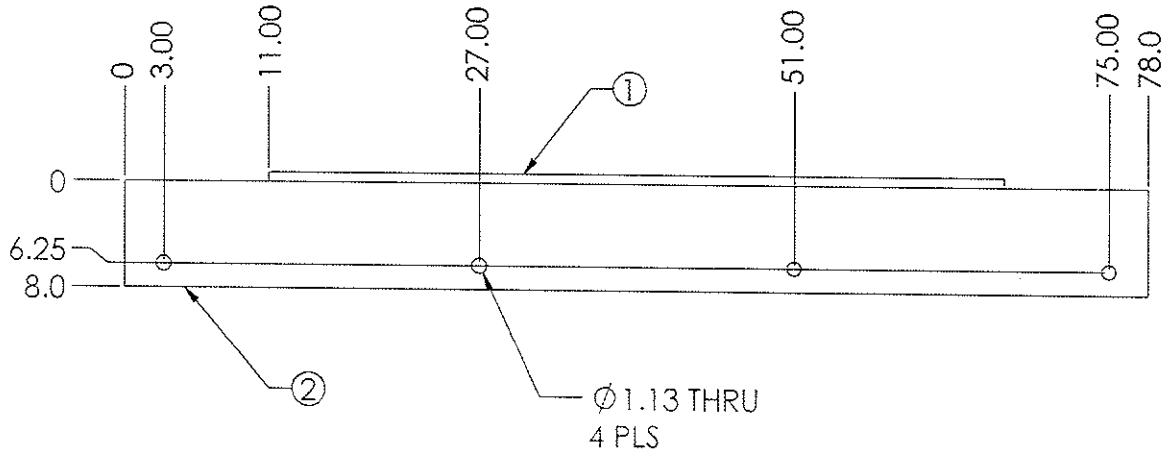

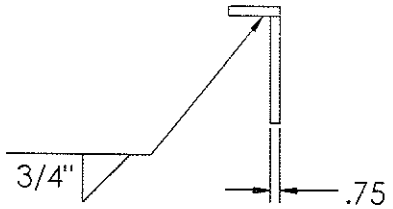

ITEM NO.	QTY.	PART NO.	TITLE	D
1	1	plate end, winch mount		
2	1	plate base end		

	XXXXX
NEXT ASSY	USED ON
APPLICATION	

UNLESS OTHERWISE SPECIFIED
DIMENSIONS ARE IN INCHES
- APPLICABLE STANDARDS MIL-STD-1917
- SURFACE FINISH 125 RMS
- MACHINED FILLETS .015 MAX
- REMOVE ALL BURRS, BREAK ALL EDGES .015 MAX
- DIMENSIONS AND SURFACE FINISH TO BE MET AFTER PROTECTIVE COATING
- DO NOT SCALE THE DRAWING

THIRD ANGLE PROJECTION

ITEM NO	PART OR IDENTIFYING NO	NOMENCLATURE OR DESCRIPTION	MATERIAL SPECIFICATION	QTY REQD
		PARTS LIST		

TOLERANCES ARE:
FRACTIONS ±1/16 DECIMALS .XX ± .02 .XXX ± .005 ANGLES ± 0.5

MATERIAL ASTM A36

UNIT VOLUME:
UNIT WEIGHT:

DO NOT SCALE DRAWING

CAD GENERATED DRAWING
DO NOT MANUALLY UPDATE

APPROVALS		DATE
DRAWN	Vern Miller	11/18/02
CHECKED		
RESP ENG		
MFG ENG		
QUAL ENG		

APPLIED PHYSICS LABORATORY

BASE PLATE END ASSY
WINCH BASE
SEA SOAR

SIZE C | CAGE CODE 98514 | DWG NO. XXXXX | REV

SCALE 1:7 | CAD FILE base plate end assy | SHEET 1 OF 1

BY: Vern Miller, ME

11/15/02

(1)

Subject: Winch Mount Plate for Seafarer on Mover

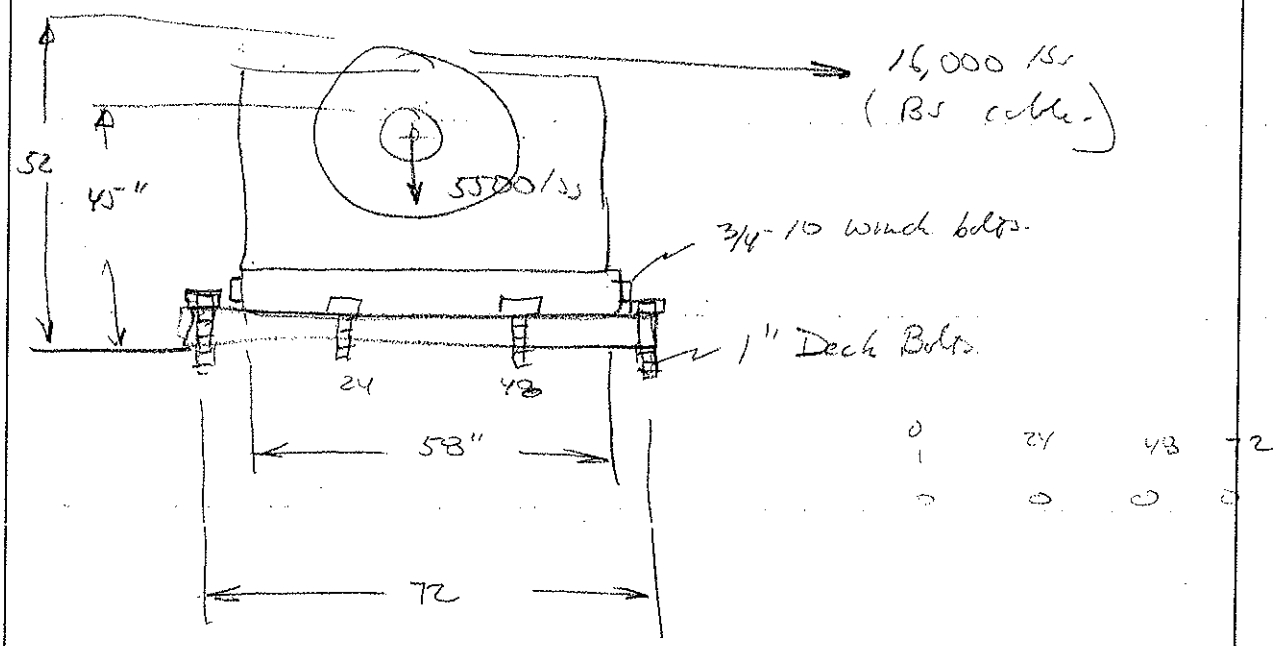

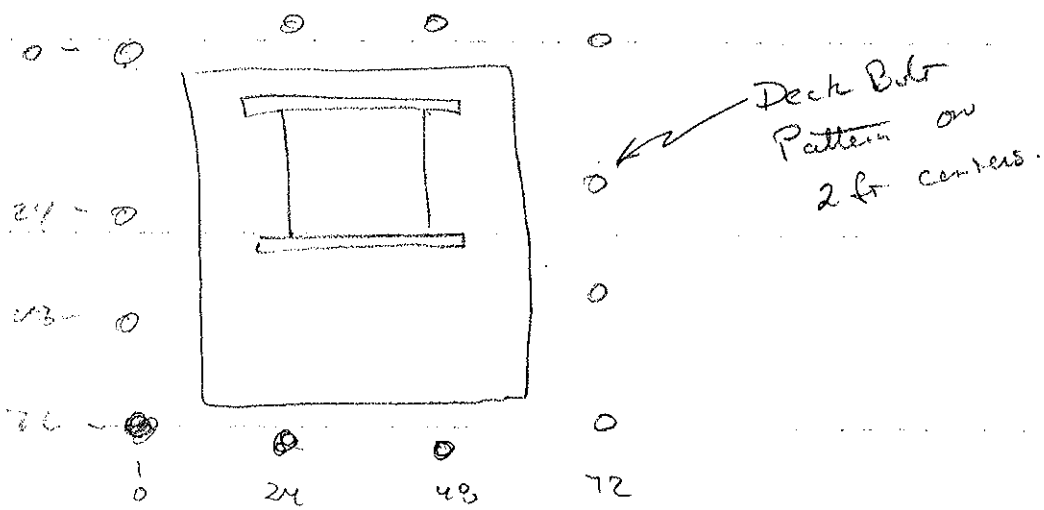

Deck Bolts are 1-8 - Maximum Torque for 1-8 bolt is

Torque = 480 ft-lb (lubed) Grade 5

Clamp Load = 38,600 lbs

BY: Vern Miller, ME

11/15/02

(2)

Subject: Winch Mount Plate & Seadoar on Knorr

Assume all bolts are equally torqued to produce clamp load of F_{clamp} lbs. @ each bolt

Solve for F_{clamp} for cable load of 16,000 lbs.

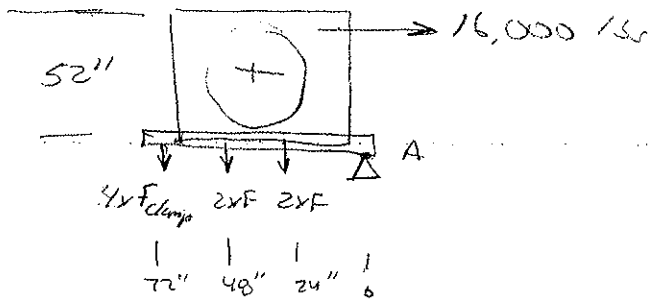

$$\Sigma M_A = 0$$

$$4F * 72 + 2F * 48 + 2F \times 24 - 16{,}000 \text{ lbs} * 52'' = 0$$

$$288F + 96F + 48F = 832{,}000 \text{ in-lb}$$

$$432'' F = 832{,}000 \text{ lbs.}$$

$$F = \frac{832{,}000}{432} = 1925 \text{ lbs}$$

Assume a 3:1 safety factor on clamping load.

$$F_{clamp\ load} = 3 \times 1925 \text{ lbs} = 5775 \text{ lbs.}$$

$$T = KFD$$

where $K = .15$ for lubed bolt.

F = clamp load. (lbs)

D = nominal bolt diameter (in)

$$\therefore T = .15 \times 5775 \text{ lbs} \times 1 \text{ in}$$

$$= 866 \text{ in-lb} \quad (72. \text{ ft-lbs})$$ ← MIN Required Torque on Bolts for Deck.

Specify 180 ft-lb. ← TO MATCH 3/4-10 Bolts on Winch.

BY: Vern Miller ME 11/18/02 (3)

Subject: Winch Mount Plate & Section on Trunnion

1) Look at the bending load in each plate at a loading of 1925 lbs. First the lug side plate

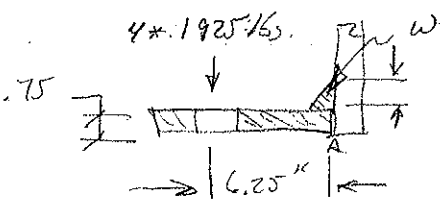

$M_A = 4 \times 1925 \text{ lbs} \times 6.25" = 48{,}125 \text{ in-lbs}$

for weld radius of .75

$I = \frac{56 \cdot .75^3}{12} = 1.969 \text{ in}^4$

$\sigma_{bend\ max} = \frac{Mc}{I} = \frac{48{,}125 * .375}{1.969} = 9165 \text{ lbs/in}^2$

For 3/4" weld area. $SF = \frac{36{,}000}{9165} = 4$

assuming failure at the base material strength. we have a 4:1 S.F. over the breaking strength of the winch cable.

2) Look at the loads on the bolts at the winch base plate to winch. The bolts are 3/4-10 Grade 5

For 3/4-10 with Lube on threads and a torque of 180 ft-lbs the clamp load is 19,200 lbs.

$P = \frac{T}{KD} = \frac{180 \times 12}{.15 \times .75} = 19{,}200$

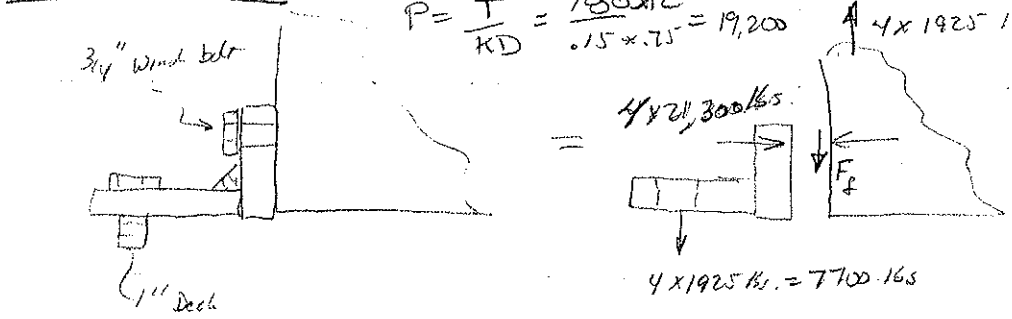

$F_f = \mu N \qquad \mu = .27$ Steel-on-Steel, oxide film

$= .27 \times 4 \times 19{,}200 \text{ lbs} = 20{,}736 \text{ lbs}$

$\frac{\text{clamping load}}{\text{winch load}} = \frac{20{,}736 \text{ lbs}}{7700 \text{ lbs}} = 2.7 : 1$

BY: Vern Miller ME

11/18/02 (4)

Subject: Winch Mount Plate for SeaSoar on Knorr

Summary of Design & Mounting Requirements for SeaSoar Winch Base on R/V Knorr —

- Winch Base material — 3/4" Plate A36 or Better. (SF = 4:1)
- Torque Winch Base to Knorr Deck —

  12 Bolts. 1-8 UNF Torque — 180 ft-lb (min) (SF = 7:1)
- Torque Winch Base to Winch Frame.

  10 Bolts 3/4 — 10 Grade 5 Torque — 180 ft-lb

  (SF = 2.7:1)

These calculations and Torque requirements are based upon an assumed winch cable load of 16,000 lbs. The breaking strength of the winch wire rope (Ø.393) is 16,000 lbs.

SERIES A1400M STANDARD DUTY BLOCKS

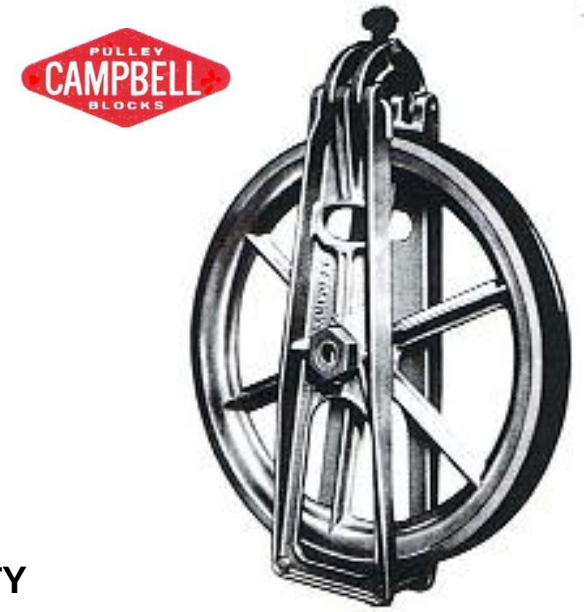

DESCRIPTION

Designed on a pattern similar to our heavy-duty models shown above but with a lesser load capacity.

A very useful tool for oceanography and similar measuring work. Fabricated from high-strength aluminum alloys and fitted with high-grade bearings.

Urethane sheave liners are offered in regular sizes or specials which entails filling the sheave groove and machine sizing.

Socket eye suspension fitting is standard and will accept any of the attachments shown below.

A1400M SERIES STANDARD DUTY

OCEANOGRAPHY BLOCKS

MODEL NUMBER	SHEAVE DIAMETER	CONDUCTOR CAPACITY		WORKING LOAD POUNDS	ULTIMATE STRENGTH POUNDS	WEIGHT POUNDS
		WITHOUT LINERS	WITH LINERS			
A1418D	18"	1-3/4"	1-1/2"	4,500	13,500	36
A1422D	22"	1-3/4"	1-1/2"	7,000	21,000	44
A1424A	24-1/2"	1-3/4"	1-1/2"	10,000	24,000	62
A1428D	28"	1-7/8"	1-5/8"	8,000	24,000	66

Weights shown above are for blocks without liners.

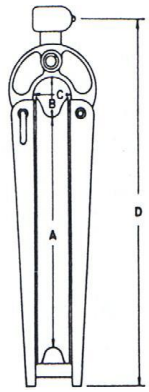

SPECIFICATIONS				
BLOCK NO.	A	B	C	D
A1418D	14"	4"	5"	26"
A1422D	18"	4"	6"	30"
A1424A	21"	3"	3-1/2"	32"
A1428D				
A1436D	30"	4-1/2"	5-1/2"	45"
A1436I	30"	4-1/2"	5-1/2"	45"

SUSPENSION FITTING ATTACHMENTS					
12	14	14A	15	16	20
MODEL NUMBER	DESCRIPTION			LOAD CAPACITY	LOAD CAPACITY
12	Safety Ball Hook			4,000	2,000
14	Plain Ball Clevis			4,000	
14A	Plain Ball Clevis with Captive Pin				
15	Y-Ball Clevis			20,000	
16	Oval Eye Ball			15,000	
20	Socket Eye			20,000	11,000